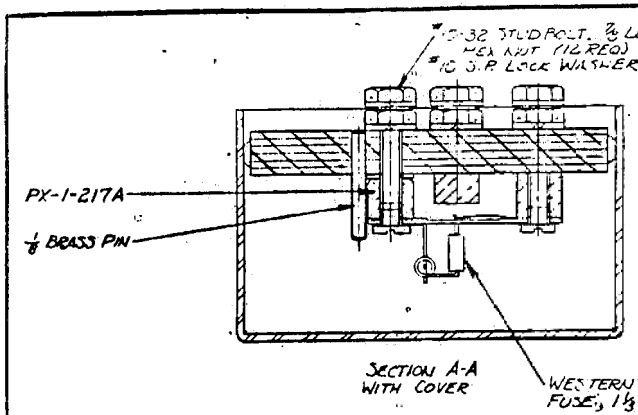

SECTION A-A WITH COVER

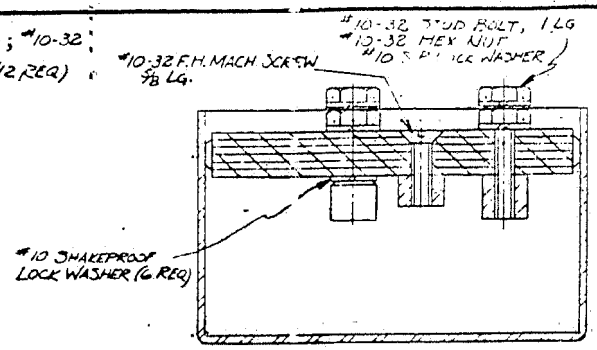

SECTION B-B WITH COVER

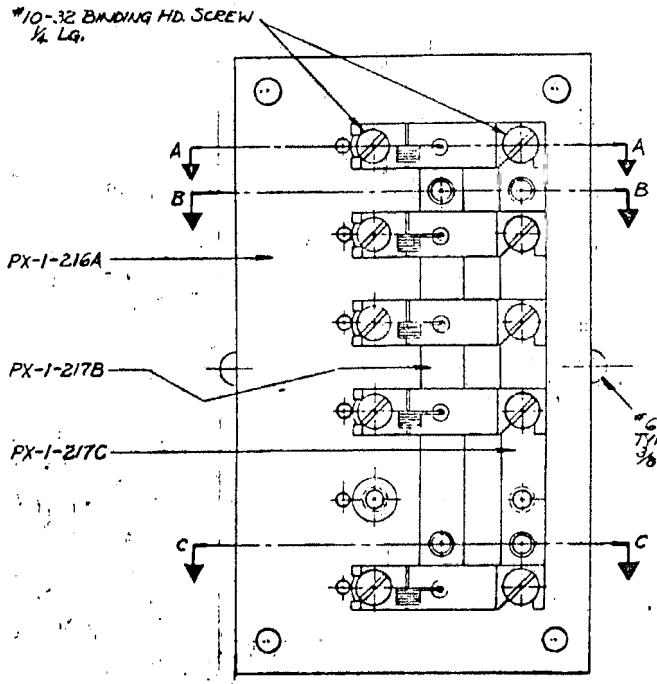

VIEW WITH COVER & ONE FUSE REMOVED

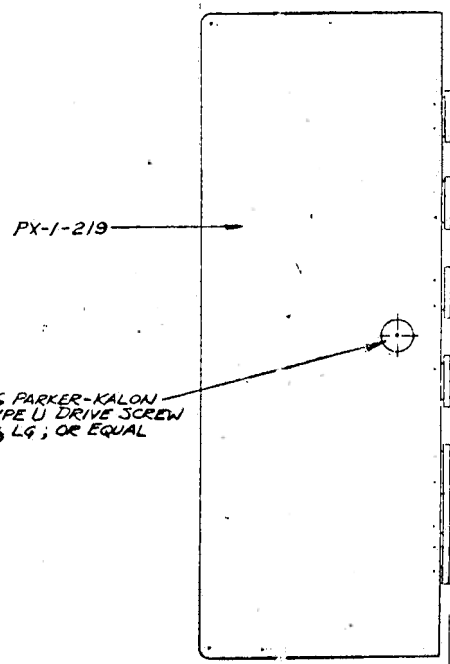

LIST OF MATERIAL

DRG. NO.	DESCRIPTION	QTY	MATERIAL
PX-1-216 A	BASE	1	BK. FAB. BAKELITE 5 3/16 X 3 X 3/8
PX-1-217A	STUD	6	BRASS 3/8 DIAM. X 3/8
PX-1-217B	BUS BAR	1	" 4 1/8 X 3/8 X 1/4
PX-1-217C	BUS BAR	1	" 4 1/8 X 3/8 X 3/8
PX-1-219	COVER	1	SHEET STEEL 18 GA.
	PIN	6	BRASS, 1/8 DIAM. X 15/16 LG.
	WESTERN ELECTRIC ALARM		
	FUSE, 1 1/3 AMP. CAT. NO. 35A	6	
	#6 PARKER-KALON TYPE U		
	DRIVE SCREW; OR EQUAL	2	STEEL 3/8 LG. CAD. PL.
	#10-32 F.H. MACH. SCREW	1	BRASS 5/8 LG.
	#10-32 " " "	1	" 3/4 LG.
	#10-32 BINDING HD SCREW	12	" 1/4 LG.
	#10-32 STUD BOLT	7	" 7/8 LG.
	#10-32 " "	1	" 1 LG.
	#10-32 HEX NUT	16	"
	#10 S.P. LOCK WASHER	22	PH. BRZ.
PARTS USED WHEN MOUNTING UNIT TO TRANSFORMER (PX-1-221)			
PX-1-217D	BASE	4	BRASS
	#8-32 R.H. MACH. SCREW	4	BRASS 3/4 LG.
	#8 S.P. LOCK WASHER	4	PH. BRZ.

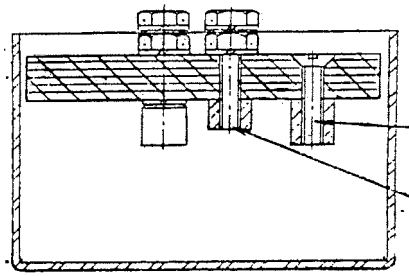

SECTION CC WITH COVER

REVISIONS		
MATERIAL FOR PX-1-217D CHANGED TO BRASS	3	4 SEP 47
PX-1-217D WAS PX-1-216B	2	29 AUG 47
ALARM STUD REVISED	1	1-30-47

MOORE SCHOOL OF ELECTRICAL ENGINEERING
UNIVERSITY OF PENNSYLVANIA

TRANSFORMERS' FUSE BLOCK

SCALE FULL SIZE

DRAWN BY	CHECKED BY	APPROVED BY	
J.E. GRAVEL 12-13-46	12/20/46		PX-1-220