UNIVERSITY OF PENNSYLVANIA
MOORE SCHOOL OF ELECTRICAL ENGINEERING

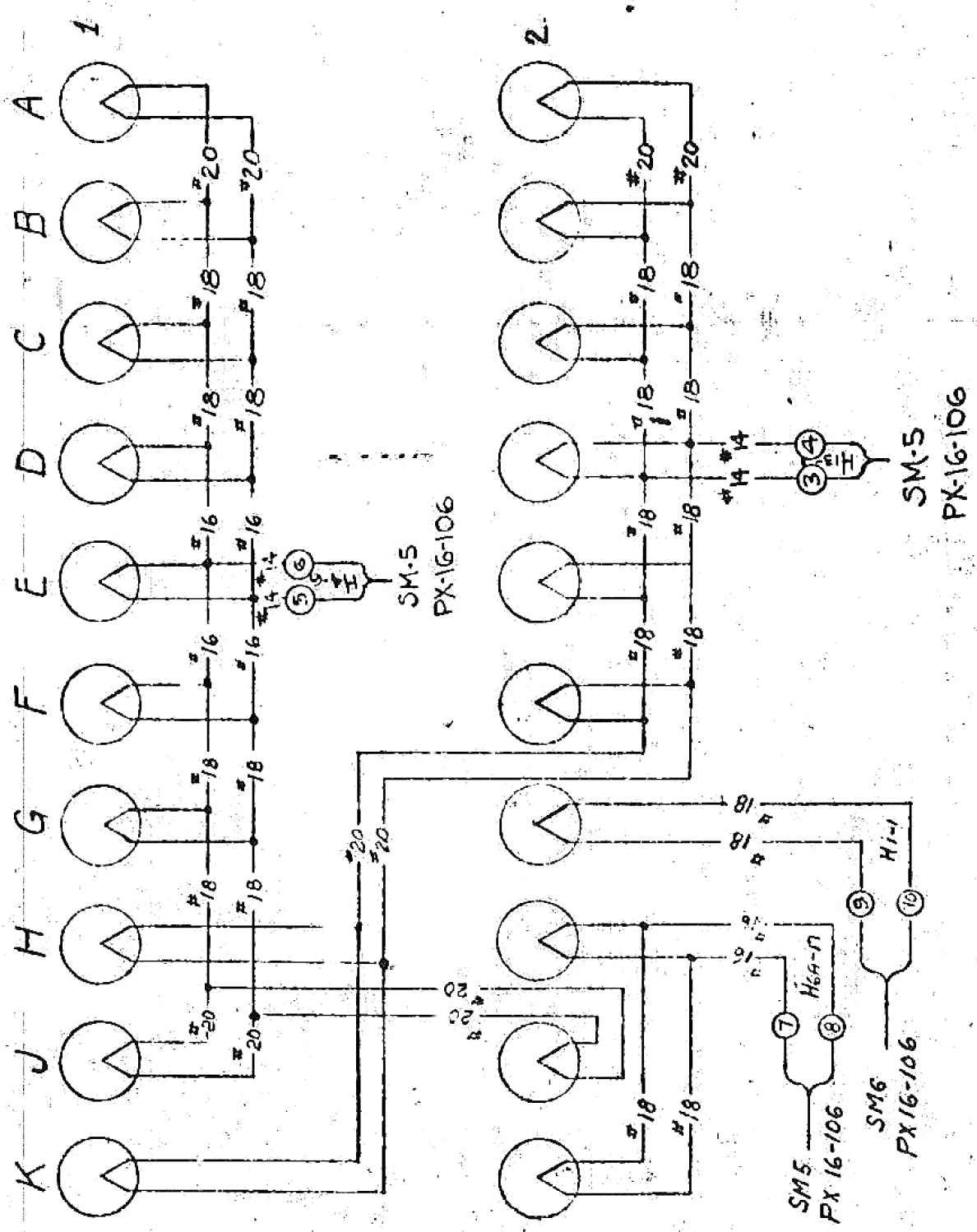

1 4-1-48		
DRAWN BY C. Sherman 3-29-47	CONVERTER TOP GATE CHASSIS HEATER WIRING	SCALE
CHECKED BY J. Mauchly 3-29-47		PX 16-101A
APPROVED BY J. P. Eckert 3/29/47		

PX-16-101A