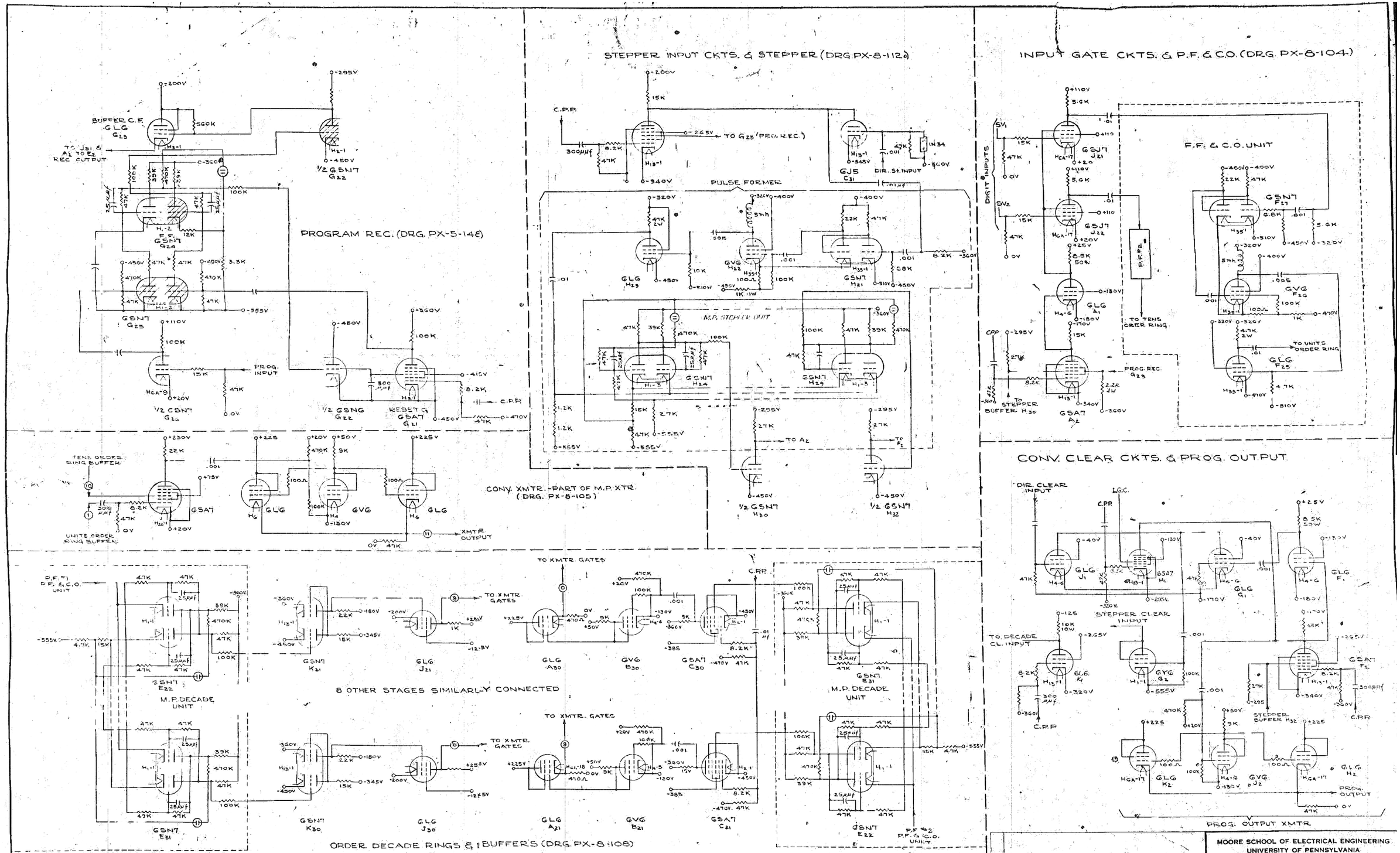

MOORE SCHOOL OF ELECTRICAL ENGINEERING
UNIVERSITY OF PENNSYLVANIA

CONVERTER CROSS SECTION

SCALE			
DRAWN BY S. PAUL 10-24-47	CHECKED BY 4-13-48	APPROVED BY 4-13-48	PX16-108