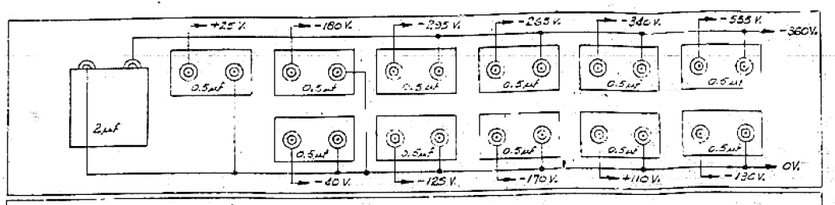

PX 16-101
BOTTOM VIEWED FROM ABOVE

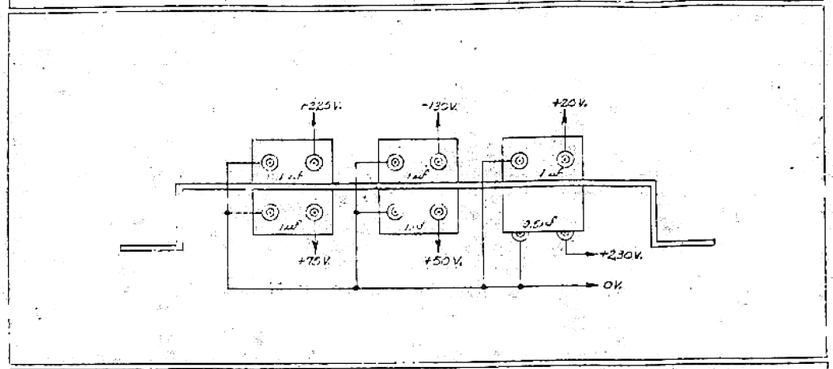

PX-16-102
VIEW FROM SIDE OF BRACKET

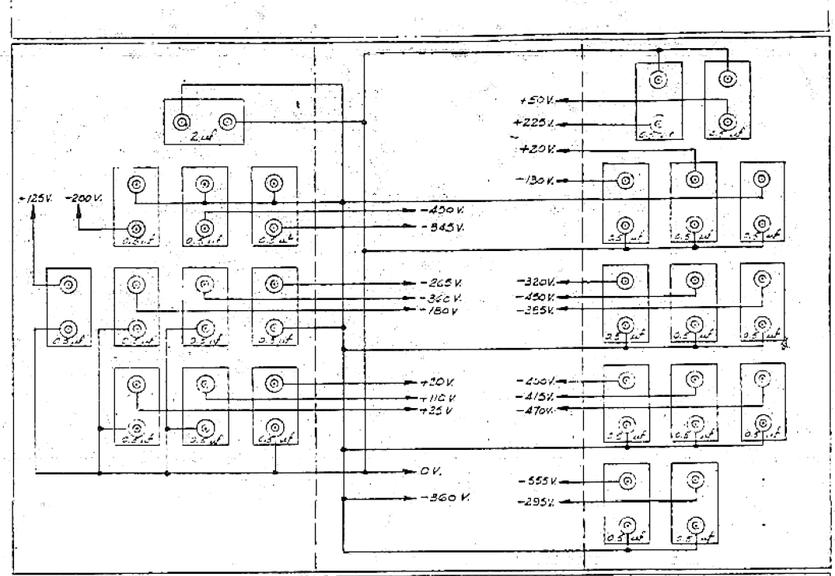

PX-16-103
RIGHT SIDE OF CHASSIS
VIEWED FROM LEFT

PX-16-108
LEFT SIDE OF CHASSIS
VIEWED FROM RIGHT

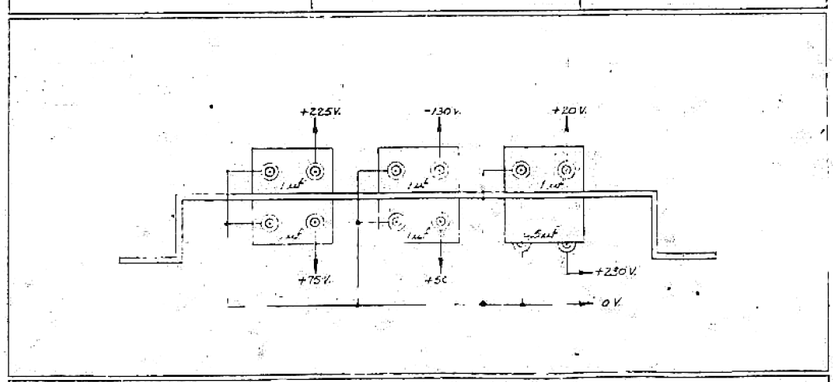

PX-16-104
VIEW FROM SIDE OF BRACKET

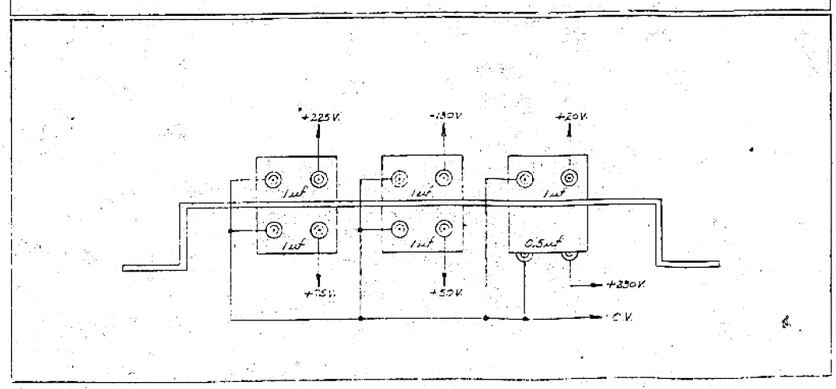

PX-16-105
VIEW FROM SIDE OF BRACKET

MOORE SCHOOL OF ELECTRICAL ENGINEERING
UNIVERSITY OF PENNSYLVANIA

CONVERTER
BY-PASSING CONDENSER WIRING

DRAWN BY JE GRAVEL 4-8-48	CHECKED BY R. 4-13-48	APPROVED BY 4-13-48
SCALE		PX-16-110