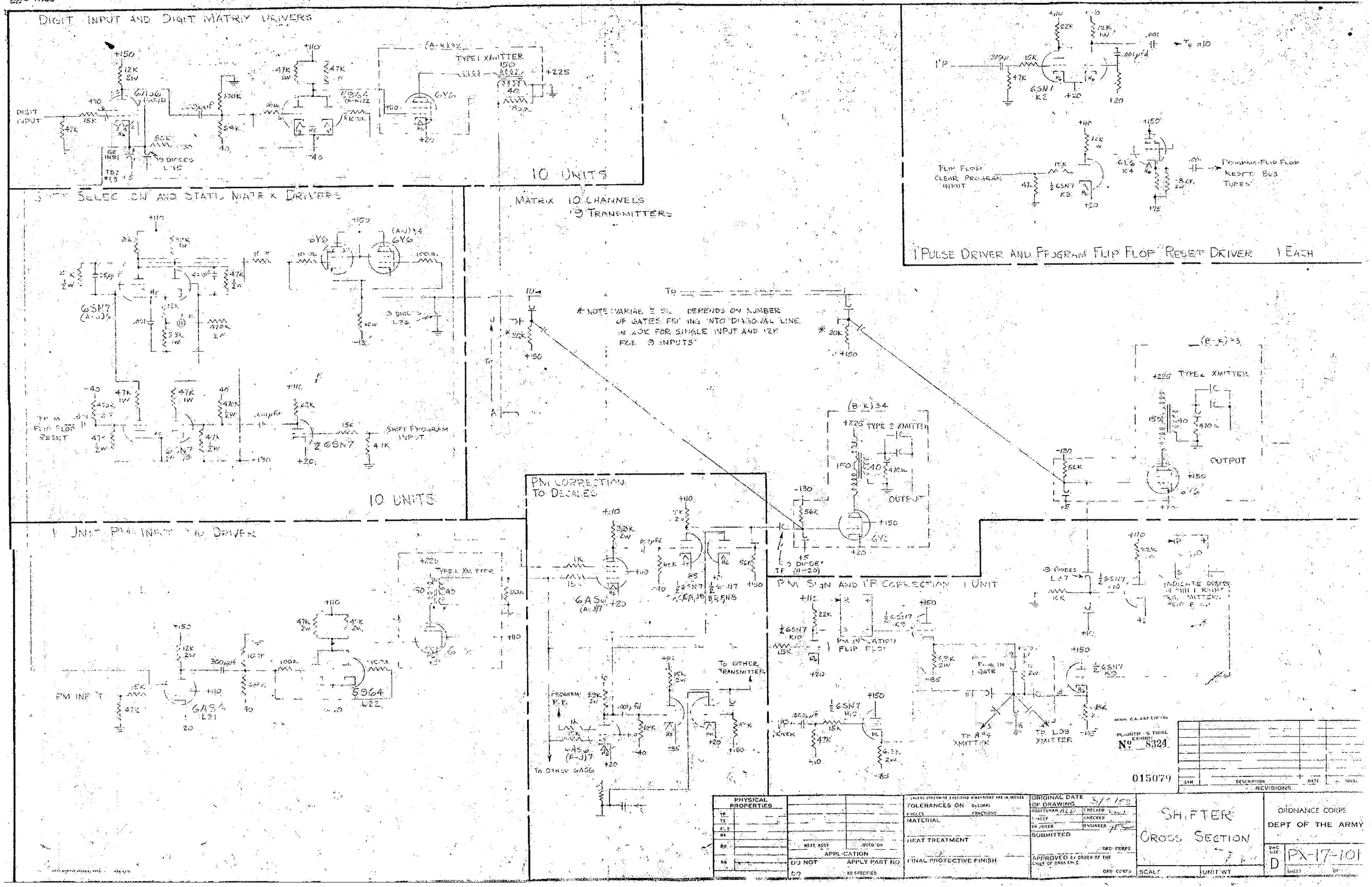
DIGIT INPUT AND DIGIT MATRIX DRIVERS
10 UNITS
MATRIX 10 CHANNELS
9 TRANSMITTERS
SELECTION AND STATIC MATRIX DRIVERS
10 UNITS
1 PULSE DRIVER AND PROGRAM FLIP FLOP "RESET" DRIVER 1 EACH
* NOTE: VARIABLE 5 SIZE DEPENDS ON NUMBER OF GATES FEEDING INTO DIAGONAL LINE. 20K FOR SINGLE INPUT AND 12K FOR 3 INPUTS
PM CORRECTION TO DECADES
PM SIGN AND IF CORRECTION 1 UNIT
1 UNIT PM INPUT AND DRIVER
TYPE 1 XMITTER
TYPE 2 XMITTER
OUTPUT
PROGRAM FLIP FLOP RESET BUS TUBES
INDICATE DIGITS
TO OTHER TRANSMITTER
TO OTHER GAS6
PLAINTIFF'S TRIAL EXHIBIT No 8324
015079
REVISIONS
PHYSICAL PROPERTIES
APPLICATION
DO NOT APPLY PART NO.
UNLESS OTHERWISE SPECIFIED DIMENSIONS ARE IN INCHES
TOLERANCES ON DECIMAL ANGLES FRACTIONS
MATERIAL
HEAT TREATMENT
FINAL PROTECTIVE FINISH
ORIGINAL DATE OF DRAWING
DRAFTSMAN
CHECKER
ENGINEER
SUBMITTED
APPROVED BY ORDER OF THE CHIEF OF ORDNANCE
SHIFTER
CROSS SECTION
ORDNANCE CORPS
DEPT OF THE ARMY
PX-17-101
SCALE
UNIT WT
SHEET