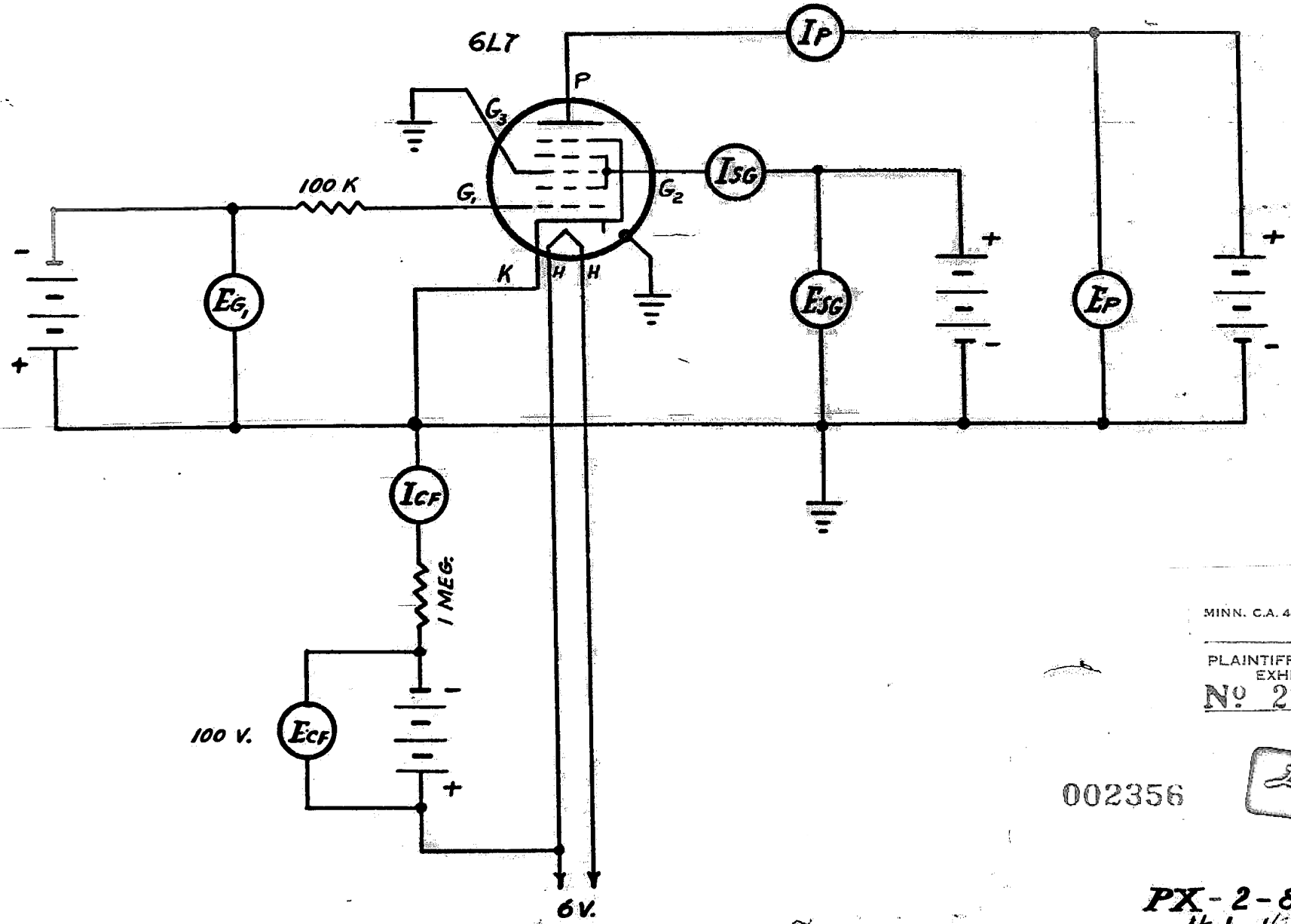

MINN. C.A. 4-67 CIV 138

PLAINTIFF'S TRIAL EXHIBIT
No 21886

002356

22

PX-2-87
H.J. 1/27/44