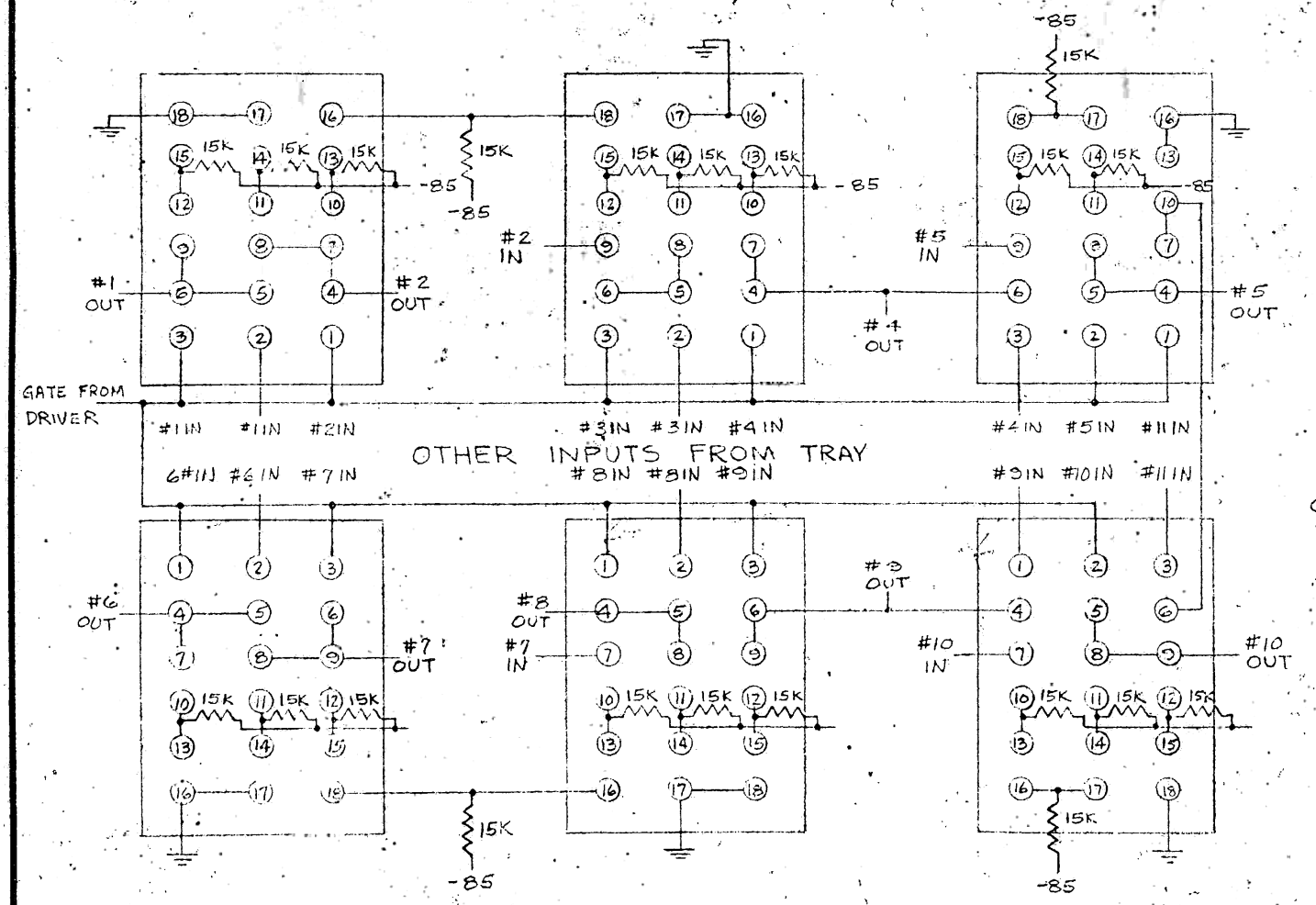

OUTPUTS GO TO MP DIRECT INPUTS

MINN. C.A. 4-67 CIV 138

PLAINTIFF'S TRIAL EXHIBIT No. 8440

015504

SYM	DESCRIPTION	DATE	APPROVAL

REVISIONS

PHYSICAL PROPERTIES	
YP	
TS	
EL 2	
RA	
BH	
RH	

NEXT ASSY | USED ON

APPLICATION

DO NOT APPLY PART NO.

UNLESS OTHERWISE SPECIFIED DIMENSIONS ARE IN INCHES

TOLERANCES ON DECIMALS ANGLES FRACTIONS

MATERIAL

HEAT TREATMENT

FINAL PROTECTIVE FINISH

ORIGINAL DATE OF DRAWING 11/19/53

DRAFTSMAN A.L.D. CHECKER JFC

TRACER CHECKER

ENGINEER JFC ENGINEER

SUBMITTED

ORD CORPS

APPROVED BY ORDER OF THE CHIEF OF ORDNANCE

WIRING DIAGRAM OF THE GATE CLUSTERS IN THE MP AUXILIARY GATE UNIT

ORDNANCE CORPS
DEPT. OF THE ARMY

DWG SIZE B

PX-4-150