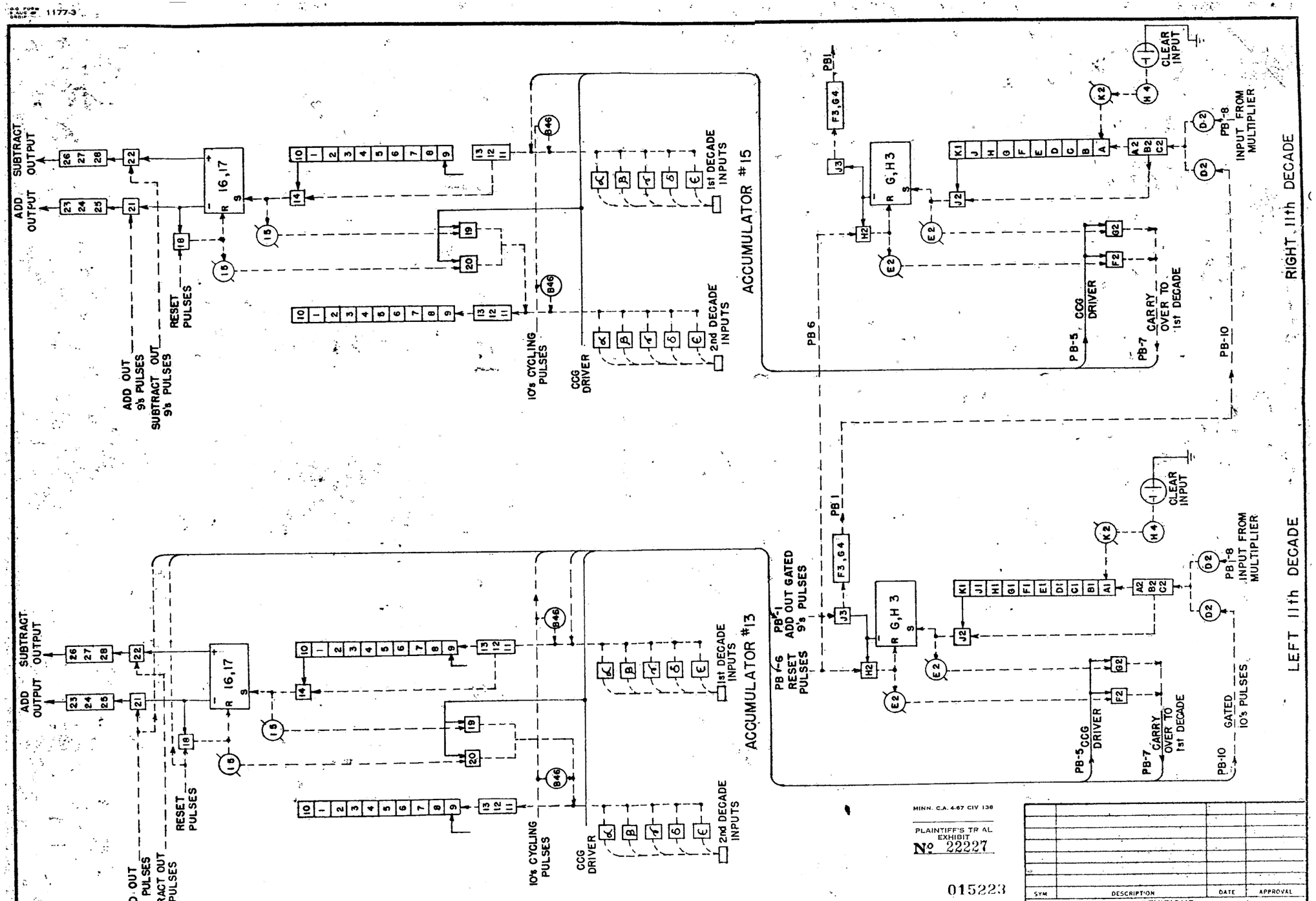

MINN. C.A. 4-67 CIV 138

PLAINTIFF'S TRIAL EXHIBIT
No. 22227

015223

SYM	DESCRIPTION	DATE	APPROVAL
	REVISIONS		

PHYSICAL PROPERTIES	
TP	
TS	
EL 2	
RA	
BH	
RH	

NEXT ASSY | USED ON

APPLICATION

DO NOT APPLY PART NO.

DO AS SPECIFIED

UNLESS OTHERWISE SPECIFIED DIMENSIONS ARE IN INCHES

TOLERANCES ON DECIMALS ANGLES FRACTIONS

MATERIAL

HEAT TREATMENT

FINAL PROTECTIVE FINISH

ORIGINAL DATE OF DRAWING

DRAFTSMAN ALD | CHECKER

TRACER | CHECKER

ENGINEER | ENGINEER JFC

SUBMITTED ORD CORPS

APPROVED BY ORDER OF THE CHIEF OF ORDNANCE ORD CORPS

ELEVENTH DECADE INTER-CONNECTION DIAGRAM

SCALE | UNIT WT

ORDNANCE CORPS
DEPT OF THE ARMY

DWG SIZE C | PX-4-307

SHEET OF