REVISIONS	
REVISED TO CORRESPOND TO ACTUAL WIRING.	
J. R. L. Nuckolls 10-31-45	1

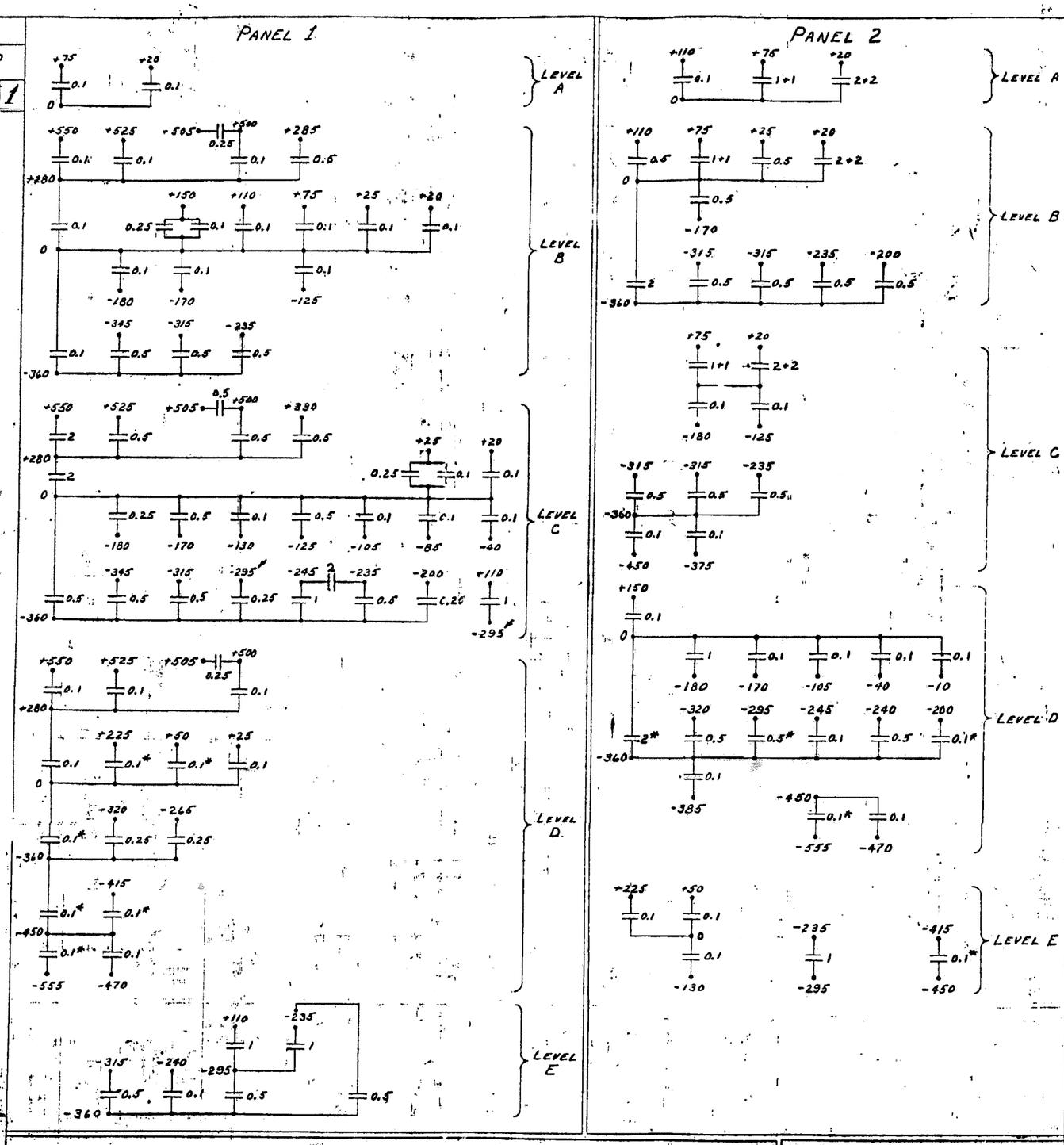

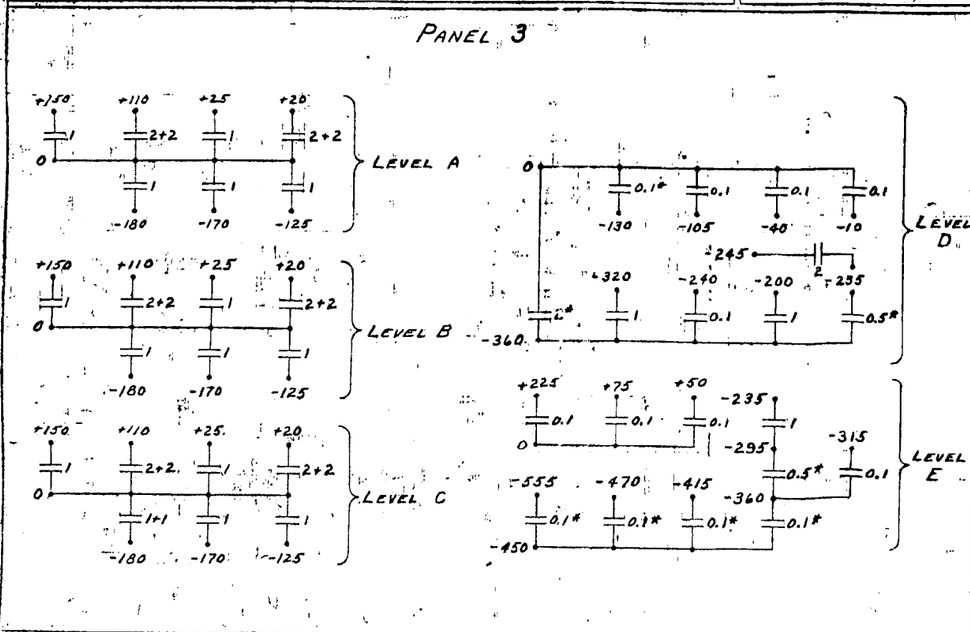

NOTES.

3+3 TERMINOLOGY USED TO INDICATE THAT AT LEVEL SHOWN, A 3μfd CONDENSER SHOULD BE WIRED AT EACH SIDE OF THE PANEL.

* INDICATES THAT CONDENSER SO MARKED MAY BE WIRED AT LEVEL D OR E, BUT PREFERABLY AT THE LEVEL INDICATED.

ALL VALUES OF CAPACITANCE STATED ARE IN MICROFARADS.

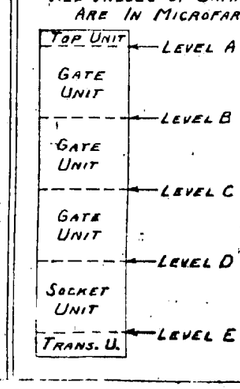

MOORE SCHOOL OF ELECTRICAL ENGINEERING
UNIVERSITY OF PENNSYLVANIA

MULT. PANELS 1, 2, & 3 BY-PASSING CONDENSER WIRING (SCHEMATIC)

Drawn by: C.J.M.C.
Oct. 4, 1945

J. R. L. Nuckolls

PX-6-124