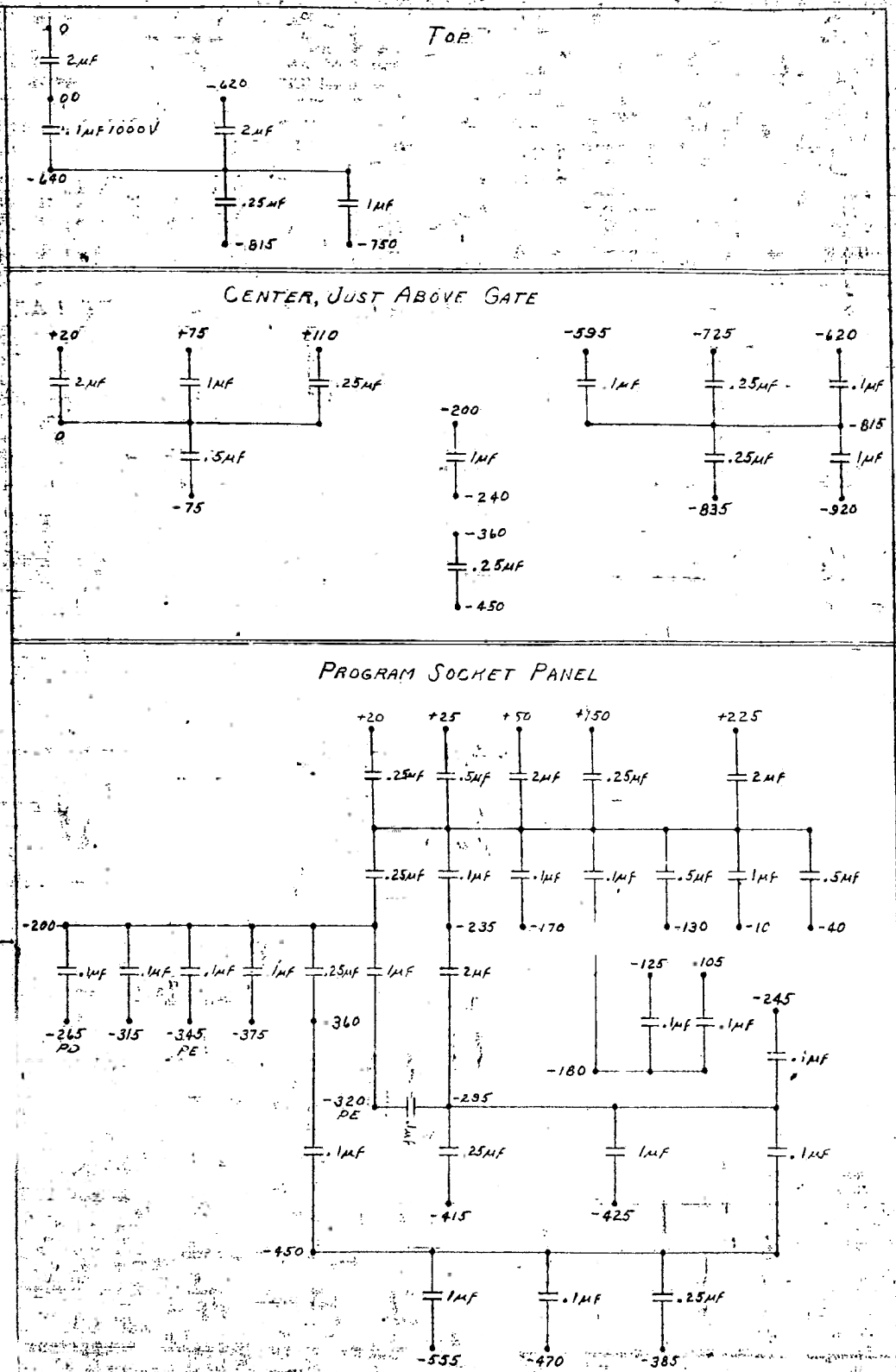

F.T. PANEL 1 BY-PASSING CONDENSER WIRING DIAGRAM

Drawn by CJM-C SEPT. 10, 1945

Checked by KFA 10 Sept 45

Approved by KFA 10 Sept 45

PX-7-143