REVISIONS

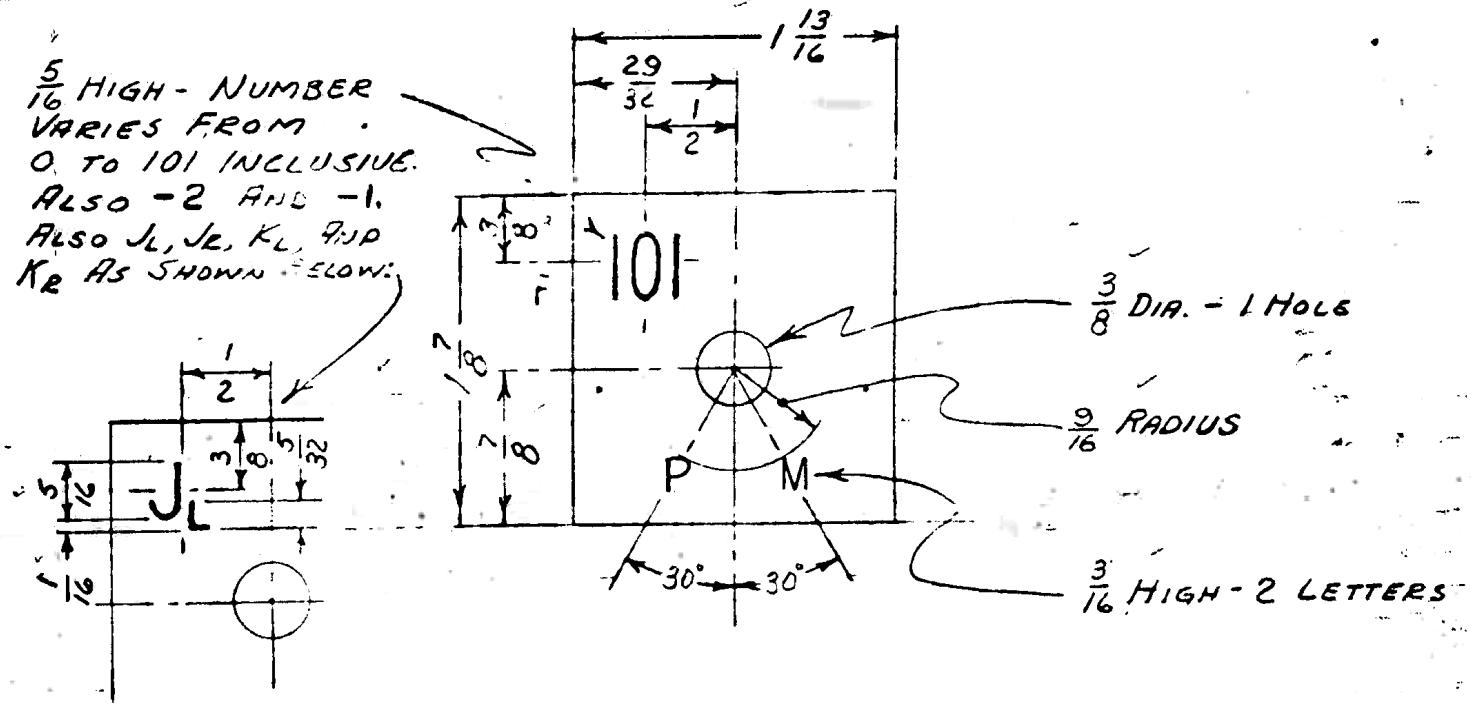

NOTE:

ALL CHARACTERS ARE REVERSED ETCHED ON PLATE.

VARIATIONS ON FINISHED DIMENSIONS (UNLESS OTHERWISE MARKED)

BASIC DIMENSIONS	FRACTIONAL DIMENSIONS	DECIMAL DIMENSIONS
UP TO 3/4	± 1/128	± .005
ABOVE 3/4 TO 6	± 1/64	± .005
ABOVE 6 TO 24	± 1/32	± .010
ABOVE 24	± 1/16	± .015

ALL DIMENSIONS ARE IN INCHES.
USE FIGURED DIMENSIONS - DO NOT SCALE.

MOORE SCHOOL OF ELECTRICAL ENGINEERING
UNIVERSITY OF PENNSYLVANIA

FUNCTION TABLE P-M SWITCH DIAL PLATE

MATERIAL	FINISH	SCALE
0.032" SHEET ZINC	PLATED & BACKGROUND BLACK LACQUERED	APPROX. FULL SIZE

Drawn by:	Checked by	Approved by:	
J. CUMMINGS JULY 28, 1944	H.K.B. 7-31-44	7-31-44	PX-7-224

129 P