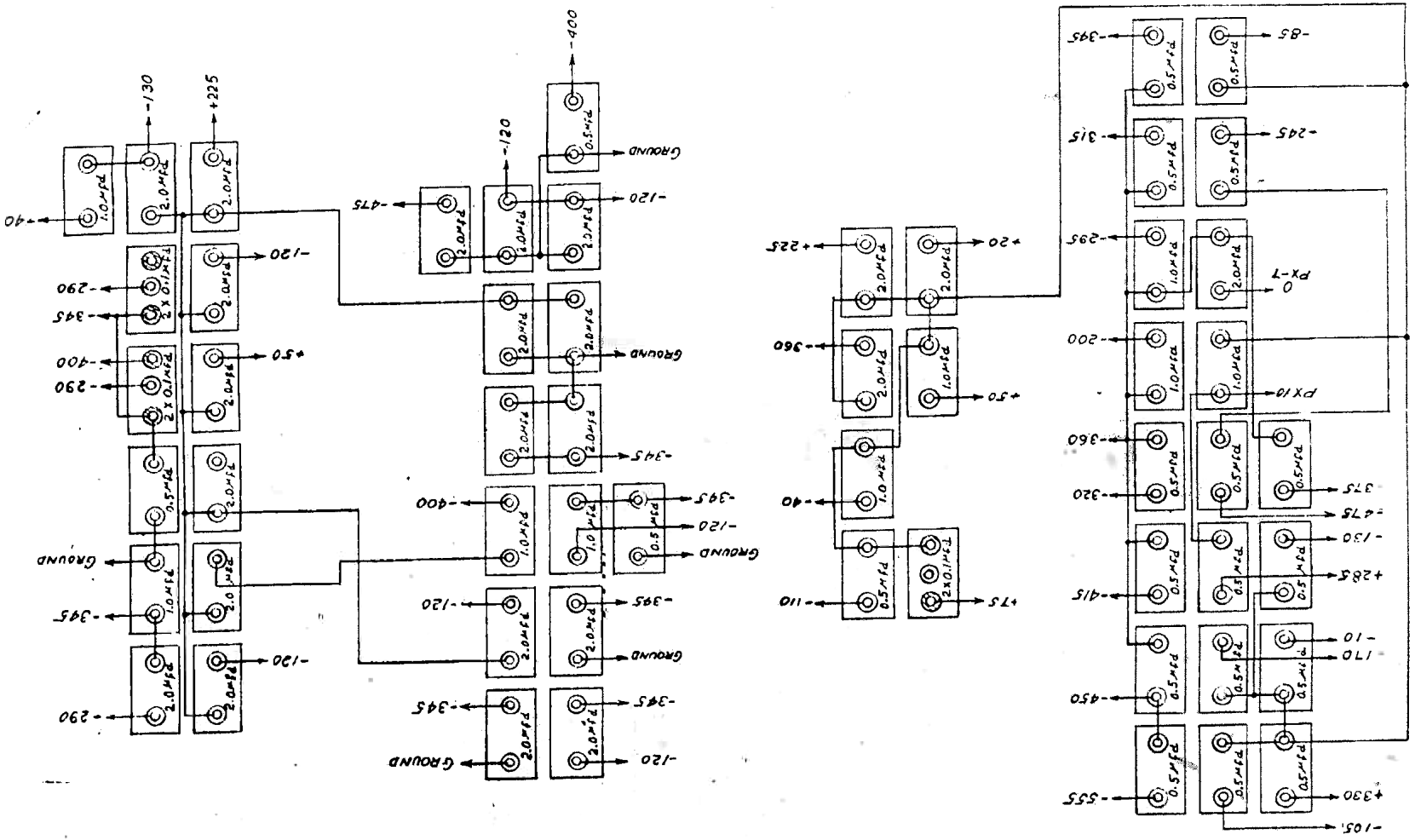

MOORE SCHOOL OF ELECTRICAL ENGINEERING
UNIVERSITY OF PENNSYLVANIA

INITIATING UNIT
BY-PASSING CONDENSER WIRING

SCALE			
DRAWN BY C.L.S. 12-18-46	CHECKED BY F.C.B.	APPROVED BY TKS	PX-9-143