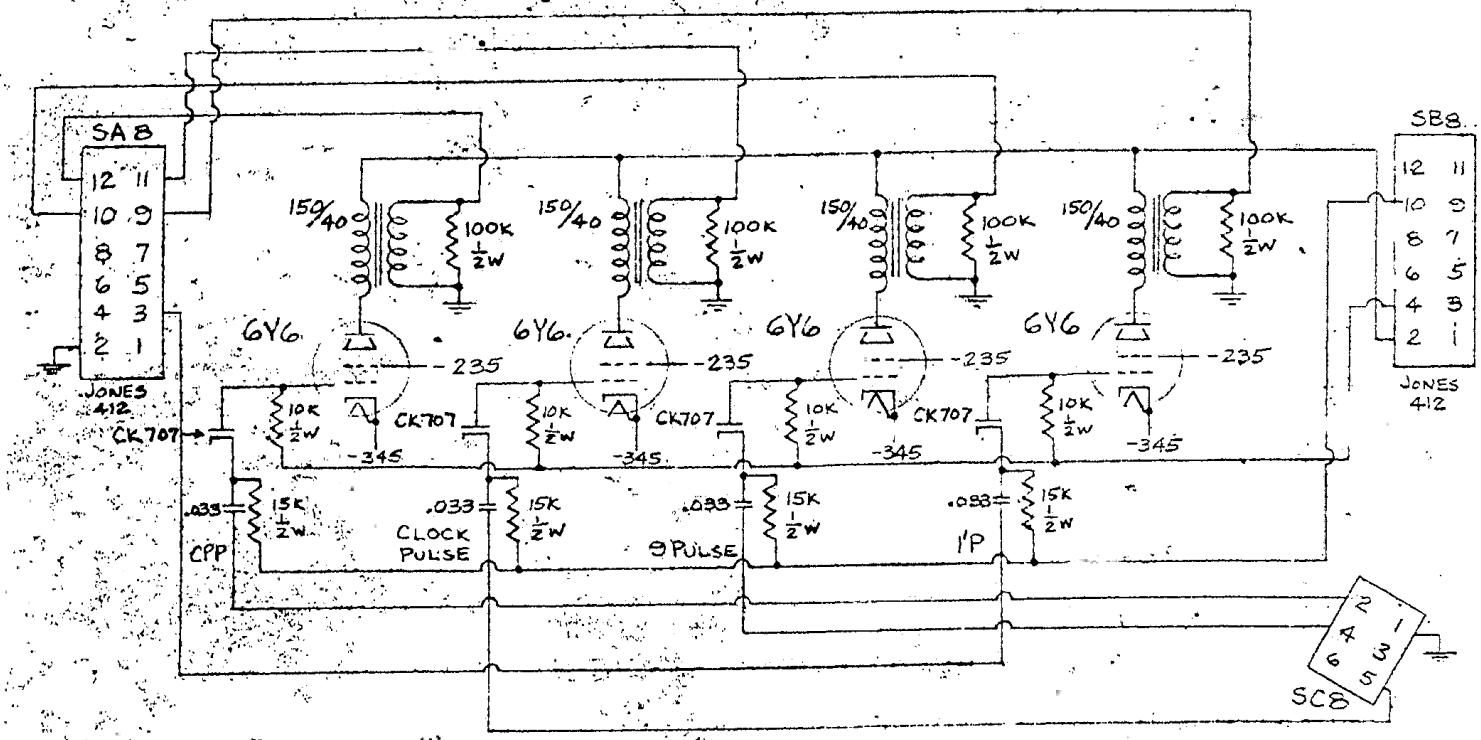

SA8	
1	—
2	GROUND
3	1'P INPUT
4	—
5	—
6	—
7	—
8	—
9	1'P OUTPUT
10	9P OUTPUT
11	CL.P OUTPUT
12	CPP OUTPUT

SB8	
1	—
2	-120
3	-255
4	-290
5	-400
6	—
7	H-S
8	H-S -345
9	SM-2 PX-9-113
10	-475
11	—
12	—

TEST BENCH VOLTAGES

-120	+225
-235	+110
-290	+50
-345	+20
-475	-130

SC8

1	GROUND
2	CPP INPUT
3	—
4	9P INPUT
5	CL.P INPUT
6	—

SYM	DESCRIPTION	DATE	APPROVAL

REVISIONS

PHYSICAL PROPERTIES	
YP	
TS	
EL 2	
RA	
BN	
RN	

NEXT ASSY | USED ON

APPLICATION

DO NOT DO | APPLY PART NO. AS SPECIFIED

UNLESS OTHERWISE SPECIFIED DIMENSIONS ARE IN INCHES

TOLERANCES ON DECIMALS ANGLES FRACTIONS

MATERIAL

HEAT TREATMENT

FINAL PROTECTIVE FINISH

ORIGINAL DATE OF DRAWING 11/9/53

DRAFTSMAN AL D | CHECKER JEC

TRACER | CHECKER

ENGINEER | ENGINEER JEC

SUBMITTED

ORD CORPS

APPROVED BY ORDER OF THE CHIEF OF ORDNANCE

ORD CORPS

SPECIAL PULSE DRIVER FOR CP, 1'P, CPP, AND 9P TO M S. MEMORY

SCALE | UNIT WT

ORDNANCE CORPS

DEPT OF THE ARMY

DWG SIZE B | PX-9-144

SHEET OF